Wireless Double PIR Camera Detector

User Manual

Legal Information

About this Document

- This Document includes instructions for using and managing the Product. Pictures, charts, images and all other information hereinafter are for description and explanation only.
- The information contained in the Document is subject to change, without notice, due to firmware updates or other reasons. Please find the latest version of the Document at the Hikvision website (***https://www.hikvision.com***). Unless otherwise agreed, Hangzhou Hikvision Digital Technology Co., Ltd. or its affiliates (hereinafter referred to as "Hikvision") makes no warranties, express or implied.
- Please use the Document with the guidance and assistance of professionals trained in supporting the Product.

About this Product

This product can only enjoy the after-sales service support in the country or region where the purchase is made.

Acknowledgment of Intellectual Property Rights

- Hikvision owns the copyrights and/or patents related to the technology embodied in the Products described in this Document, which may include licenses obtained from third parties.
- Any part of the Document, including text, pictures, graphics, etc., belongs to Hikvision. No part of this Document may be excerpted, copied, translated, or modified in whole or in part by any means without written permission.
- HIKVISION and other Hikvision's trademarks and logos are the properties of Hikvision in various jurisdictions.
- Other trademarks and logos mentioned are the properties of their respective owners.

LEGAL DISCLAIMER

- TO THE MAXIMUM EXTENT PERMITTED BY APPLICABLE LAW, THIS DOCUMENT AND THE PRODUCT DESCRIBED, WITH ITS HARDWARE, SOFTWARE AND FIRMWARE, ARE PROVIDED "AS IS" AND "WITH ALL FAULTS AND ERRORS". HIKVISION MAKES NO WARRANTIES, EXPRESS OR IMPLIED, INCLUDING WITHOUT LIMITATION, MERCHANTABILITY, SATISFACTORY QUALITY, OR FITNESS FOR A PARTICULAR PURPOSE. THE USE OF THE PRODUCT BY YOU IS AT YOUR OWN RISK. IN NO EVENT WILL HIKVISION BE LIABLE TO YOU FOR ANY SPECIAL, CONSEQUENTIAL, INCIDENTAL, OR INDIRECT DAMAGES, INCLUDING, AMONG OTHERS, DAMAGES FOR LOSS OF BUSINESS PROFITS, BUSINESS INTERRUPTION, OR LOSS OF DATA, CORRUPTION OF SYSTEMS, OR LOSS OF DOCUMENTATION, WHETHER BASED ON BREACH OF CONTRACT, TORT (INCLUDING NEGLIGENCE), PRODUCT LIABILITY, OR OTHERWISE, IN CONNECTION WITH THE USE OF THE

PRODUCT, EVEN IF HIKVISION HAS BEEN ADVISED OF THE POSSIBILITY OF SUCH DAMAGES OR LOSS.

- YOU ACKNOWLEDGE THAT THE NATURE OF THE INTERNET PROVIDES FOR INHERENT SECURITY RISKS, AND HIKVISION SHALL NOT TAKE ANY RESPONSIBILITIES FOR ABNORMAL OPERATION, PRIVACY LEAKAGE OR OTHER DAMAGES RESULTING FROM CYBER-ATTACK, HACKER ATTACK, VIRUS INFECTION, OR OTHER INTERNET SECURITY RISKS; HOWEVER, HIKVISION WILL PROVIDE TIMELY TECHNICAL SUPPORT IF REQUIRED.
- YOU AGREE TO USE THIS PRODUCT IN COMPLIANCE WITH ALL APPLICABLE LAWS, AND YOU ARE SOLELY RESPONSIBLE FOR ENSURING THAT YOUR USE CONFORMS TO THE APPLICABLE LAW. ESPECIALLY, YOU ARE RESPONSIBLE, FOR USING THIS PRODUCT IN A MANNER THAT DOES NOT INFRINGE ON THE RIGHTS OF THIRD PARTIES, INCLUDING WITHOUT LIMITATION, RIGHTS OF PUBLICITY, INTELLECTUAL PROPERTY RIGHTS, OR DATA PROTECTION AND OTHER PRIVACY RIGHTS. YOU SHALL NOT USE THIS PRODUCT FOR ANY PROHIBITED END-USES, INCLUDING THE DEVELOPMENT OR PRODUCTION OF WEAPONS OF MASS DESTRUCTION, THE DEVELOPMENT OR PRODUCTION OF CHEMICAL OR BIOLOGICAL WEAPONS, ANY ACTIVITIES IN THE CONTEXT RELATED TO ANY NUCLEAR EXPLOSIVE OR UNSAFE NUCLEAR FUEL-CYCLE, OR IN SUPPORT OF HUMAN RIGHTS ABUSES.
- IN THE EVENT OF ANY CONFLICTS BETWEEN THIS DOCUMENT AND THE APPLICABLE LAW, THE LATTER PREVAILS.

© Hangzhou Hikvision Digital Technology Co., Ltd. All rights reserved.

Symbol Conventions

The symbols that may be found in this document are defined as follows.

Symbol	Description
Danger	Indicates a hazardous situation which, if not avoided, will or could result in death or serious injury.
Caution	Indicates a potentially hazardous situation which, if not avoided, could result in equipment damage, data loss, performance degradation, or unexpected results.
Note	Provides additional information to emphasize or supplement important points of the main text.

Contents

Chapter 1 Appearance **1**

Chapter 2 Enrollment **2**

2.1 Enrollment via Web Browser 2

Chapter 3 Test **3**

Chapter 4 Installation **5**

4.1 Installation Preparation 5

4.2 Device Installation 7

4.2.1 Mounting with Screws 7

4.2.2 Mounting with Bracket 8

4.3 Shelter Installation (Optional) 11

Chapter 5 Configuration **13**

5.1 Configure via App 13

5.2 Configure via Web Browser 14

Chapter 6 Specifications **17**

Chapter 1 Appearance

Check components location and name for further use.

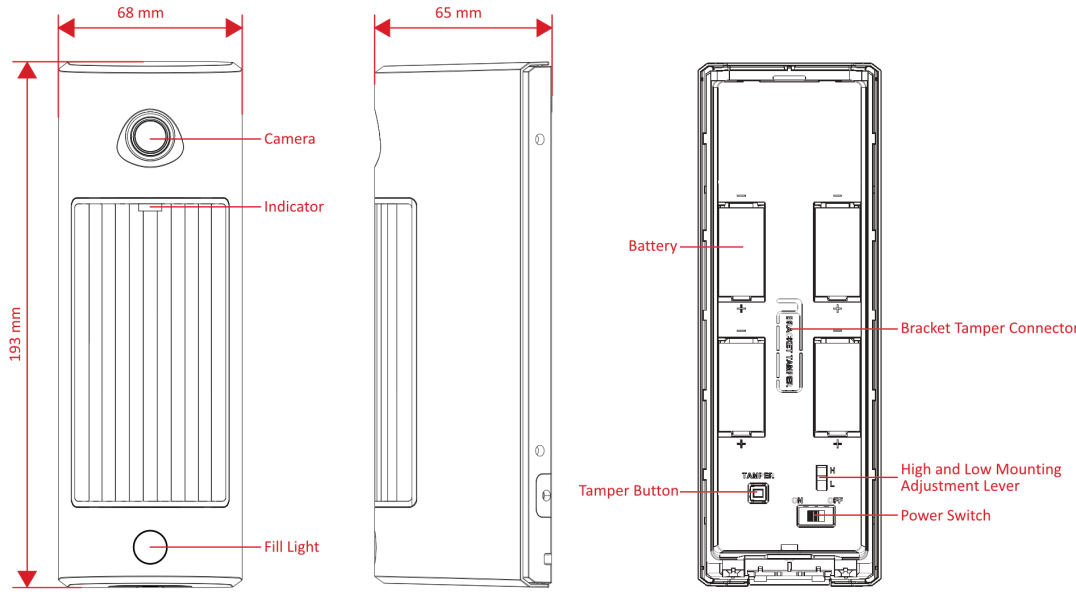

Figure 1-1 Appearance

Indicator Status	Device Status
Green LED remains on for 1 s	Power on
Green LED flashes 7 times	Enrolled
Blue LED remains on for 2 s	Overall Alarm
Green LED remains on for 2 s	Upper PIR Triggered
Orange LED remains on for 2 s	Lower PIR Triggered
Orange LED flashes for 3 s	Self Test Failed or Timeout

Chapter 2 Enrollment

2.1 Enrollment via Web Browser

Steps

1. Enter the control panel's IP address in the address bar of the mobile browser and press **Enter** to enter the login page. Enter the user name and the password. Click **Login**.
2. Click **Device → + Add** .
3. Select adding method.
   - Click **Enroll in Batch → Next** , the enrollment mode will be enabled, the device will be enrolled to the control panel automatically.
   - Click **Manually Add → Next** , enter the serial No. to enroll the device.
4. Adjust the knob to the unlock icon.
5. Press the button to remove the rear panel and the middle frame.
6. Install 4 batteries into the device and turn on the power switch. The green LED remains for 1 s.
7. The green LED flashes for 7 times, the device is enrolled.

Chapter 3 Test

The device will enter test mode (3 min) after being enrolled. Or Tap ⚙ → **Detection Zone Test** .

Trigger the device within the range. If the indicator turns blue, the installation position is properly. If the indicator is still off, adjust the position of the device.

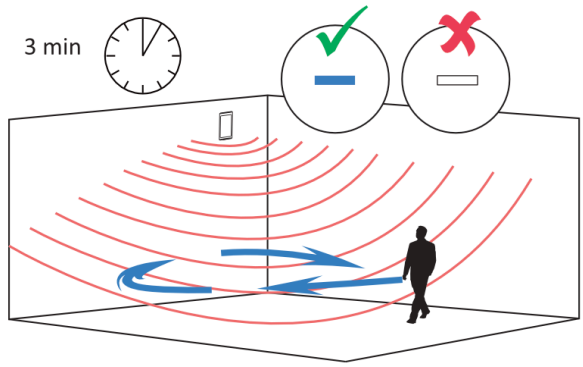

Top View

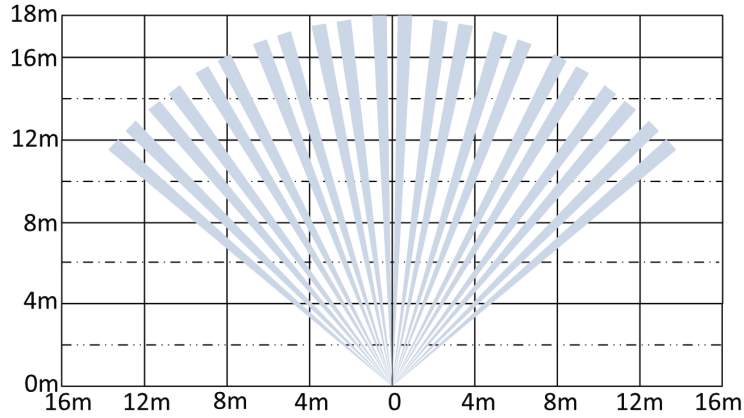

Side View

High Mounting (Pet immunity is supported only at a downtilt angle of 0°.)

Recommended Installation Height and Angle

Mounting Height	Downtilt Angle	Detection Range
2.5 m	0°	3 m to 18 m
2.7 m	10°	3 m to 13 m
3.0 m	10°	3 m to 14 m

The detection range is measured at a detection ambient temperature of 23°C.
It is recommended that adjust the downtilt to meet the actual application scenario. Increasing the downtilt will reduce blind spots in downward detection but sacrifice long-range detection performance.

Low Mounting

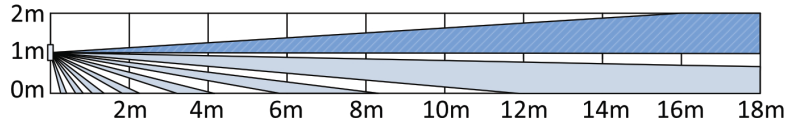

Chapter 4 Installation

4.1 Installation Preparation

Steps

1. Check the installation environment.

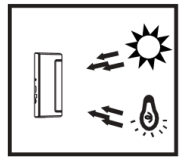

Facing Direct Strong Light

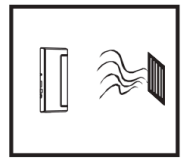

Source of air currents

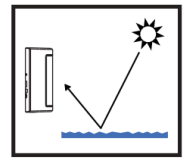

Facing reflective surfaces

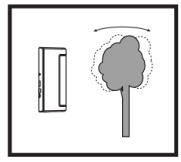

Areas with moving objects

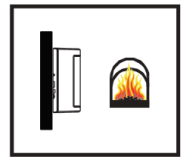

Surface that absorb heat or rapid temperature change area

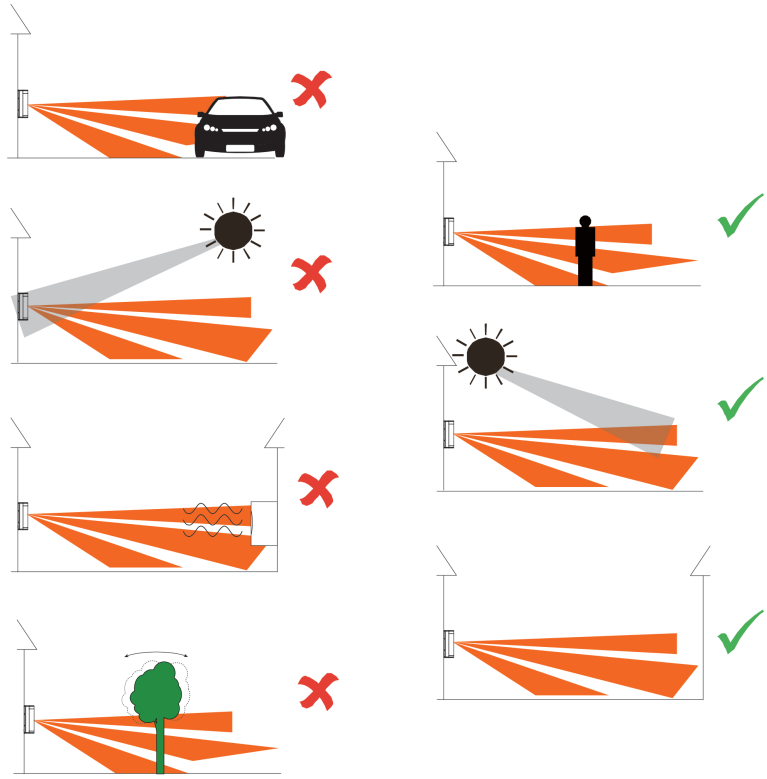

2. Adjust the mounting height.

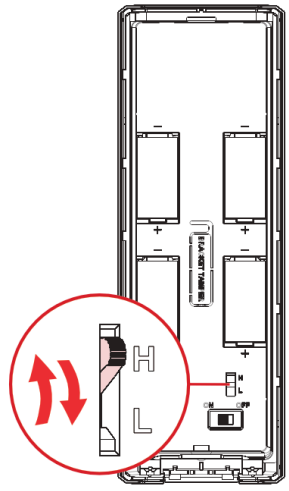

H Model

2.5 to 3 m (typical 2.7 m)

L Model

0.8 to 1.2 m (typical 1 m)

3. Tap the device on the device list page. And tap ⚙ → **Signal Strength Test** to check signal strength.

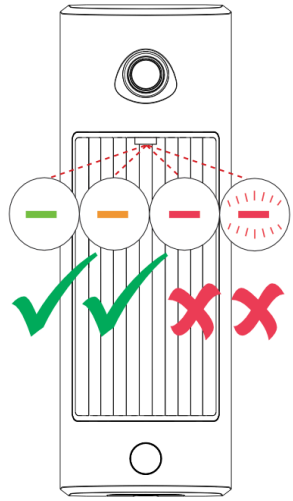

4.2 Device Installation

4.2.1 Mounting with Screws

Steps

1. Slide the middle frame downward.

2. Separate the middle frame and the rear cover.

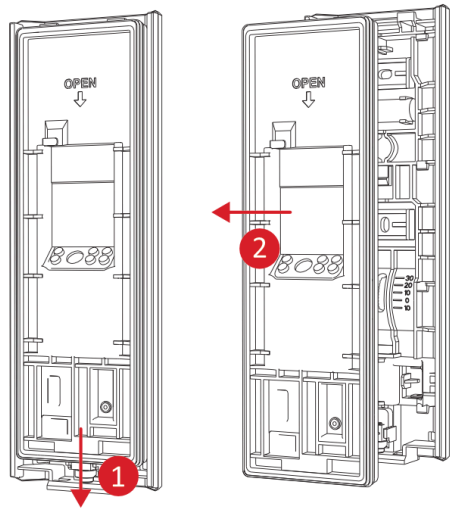

3. Secure the rear cover with 2 screws (SC-PA3.5×25).

4. Put the middle frame back.
5. Slide up the middle frame to secure it to the rear cover.

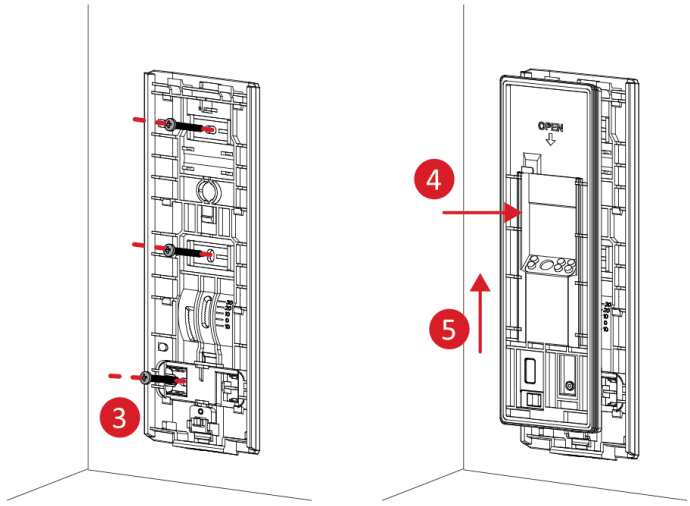

6. Install the front cover back.
7. Adjust the knob to the lock icon.

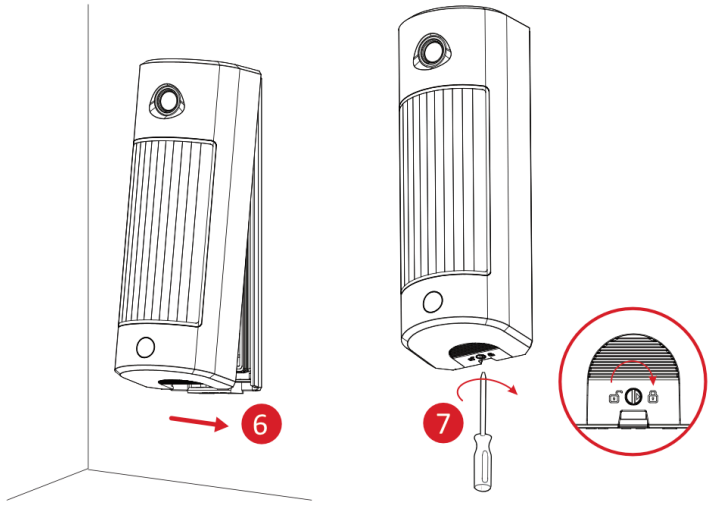

4.2.2 Mounting with Bracket

Steps
1. Slide the middle frame downward.
2. Separate the middle frame and the rear cover.

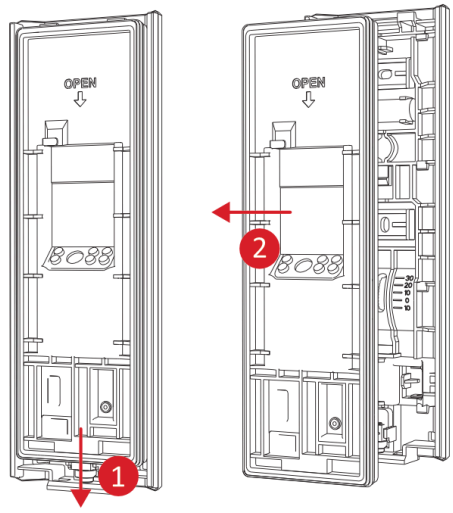

3. Secure the bracket with 2 screws (SC-PA3.5 × 25).
4. Thread the tamper wire out of the hole. Install the rear cover to the bracket with 1 screw (SC-PM4 × 35).

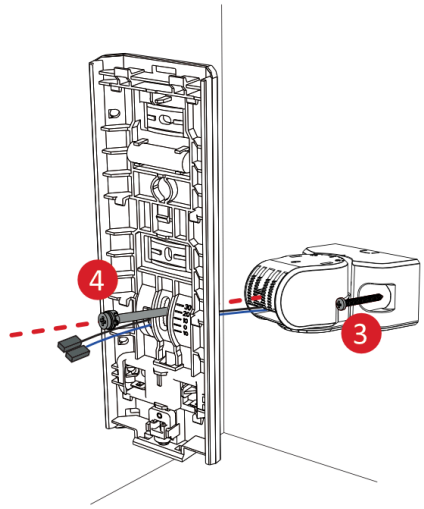

5. Remove the soft glue at the threading hole of the middle frame.

Note

It's recommended to use a screwdriver to remove the glue from the back.

6. Thread the tamper wire through the hole of the middle frame.

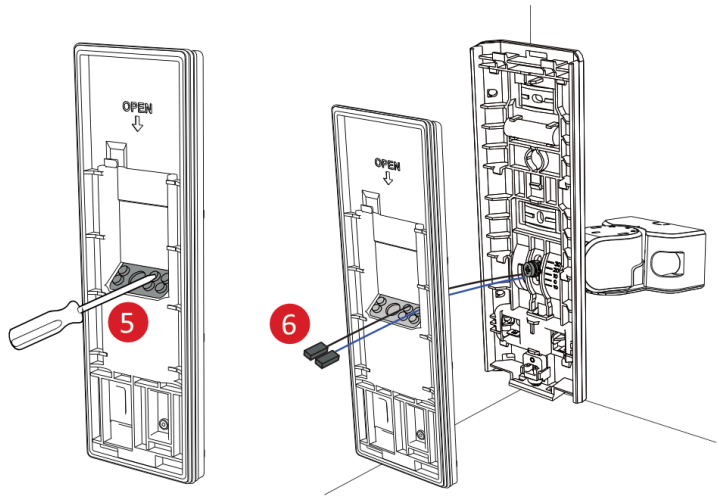

7. Put the middle frame back.
8. Slide up the middle frame to secure it to the rear cover.

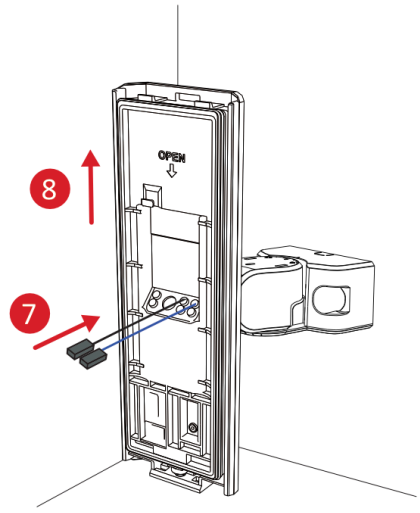

9. Remove the bracket tamper connector.
10. Connect and fix the tamper wire with the bracket tamper connector.

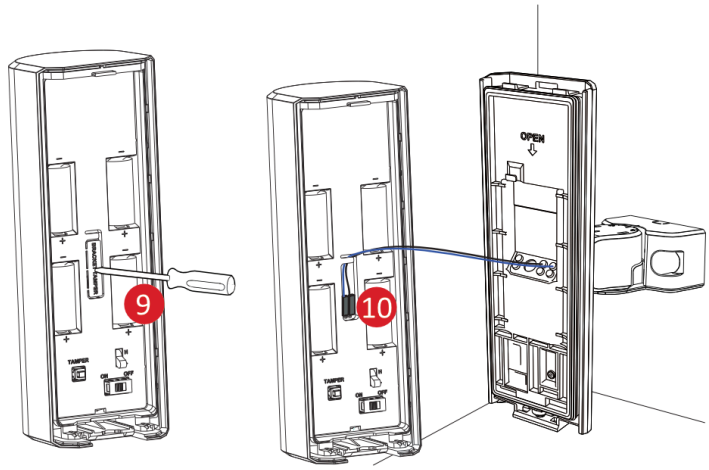

11. Install the front cover back.
12. Adjust the knob to the lock icon.

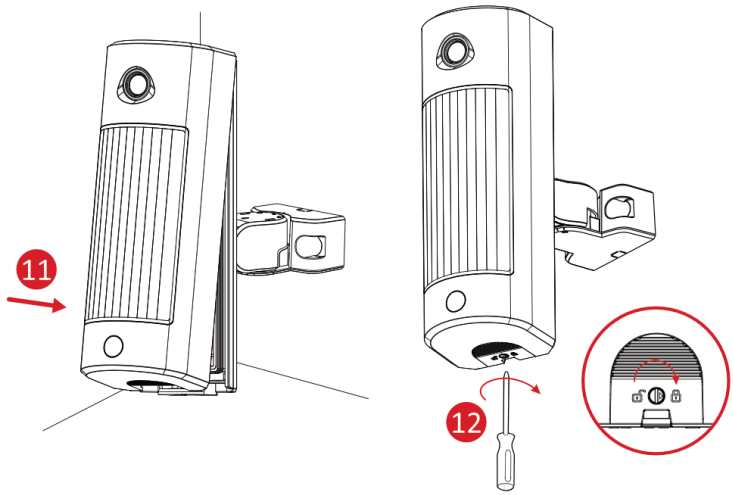

4.3 Shelter Installation (Optional)

In order to prevent rainwater from forming a rain curtain on the surface of the device lens; To prevent snow from covering the lens or icicles from forming after the snow melts, you can install the shelter on the top of the device to ensure better detection.

Steps

1. Check the installation environment.

Note

- The recommended environment temperature is 20 to 40 °C.
- Ensure that the surface to be pasted is free of dust, oil stains, wet spots, etc. Please clean the surface before pasting.

2. Paste the double-sided tape onto the top of the inner shelter, and remove the adhesive sticker.

3. Install the shelter to the device, and ensure it is tightly pressed.

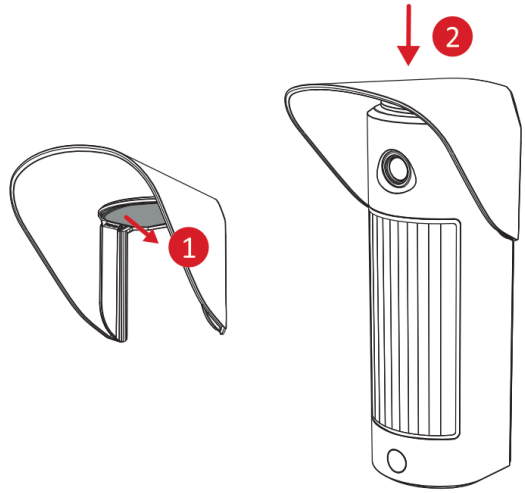

Chapter 5 Configuration

5.1 Configure via App

Tap the device on the device list page, and tap ⚙ to configure device parameters.

Name

Edit device name.

Area

Select linked area or add new area.

Zone Type

Select a zone type.

Instant

This Zone type will immediately trigger an alarm event when armed.

Delay

Entry Delay Time

Entry Delay provides you time to enter the zone to disarm the system without alarm. After triggering, if the zone is not disarmed or silenced before the entry delay time ends, the zone will alarm.

Exit Delay Time

Exit Delay provides you time to leave through the zone without alarm. You should confirm faults first, and then the zone is in arming process. If the delay zone is triggered within the exit delay time but it restores before the time ends, the alarm will not be triggered and the zone will be armed.

Stay Arm Delay Time

Stay arming uses Stay Arm Delay Time to count down. The system gives entry/exit delay time when it is armed or reentered. It is usually used in entrance/exit route (e.g. front door/main entrance), which is a key route to arm/disarm via operating keypad for users.

Follow

The zone acts as delay zone when it detects triggering event during system Entry Delay, while it acts as instant zone otherwise.

24-hour

The zone activates all the time with sound/light output when alarm occurs, whether it is armed or not. It is usually used in fire hazardous areas equipped with smoke detectors and temperature sensors.

PIR Sensitivity

Select the sensitivity level of PIR detection.

Image Resolution

Select how many pixels are in each inch of the image. The larger the value, the higher the resolution.

Image In Series

Set the number of images captured by the camera during a single trigger.

Trigger Interval

Select the time interval at which the alarm will be triggered.

LED

When enabled, the LED indicator will indicate different device status.

Activation Limit

When the number of times the infrared detector is triggered exceeds the set value, the alarm will no longer be triggered.

Polling Rate

Set the interval at which the system requires the device to return a report. If the device takes longer than the **Polling Failure Times to Determine Offline** to reply, the system will report faults and the status of device will be shown as offline.

Find Me

Enter the find me mode to search for the device location.

Buzzer

When enabled, the buzzer will sound once when there is no picture alarm, picture alarm, fault prompt, or fault occurs or recovers.

5.2 Configure via Web Browser

Select the device on the device list, and click ✎ to configure device parameters.

Name

Edit device name.

Area

Select linked area or add new area.

Zone Type

Select a zone type.

Instant

This Zone type will immediately trigger an alarm event when armed.

Delay

Entry Delay Time

Entry Delay provides you time to enter the zone to disarm the system without alarm. After triggering, if the zone is not disarmed or silenced before the entry delay time ends, the zone will alarm.

Exit Delay Time

Exit Delay provides you time to leave through the zone without alarm. You should confirm faults first, and then the zone is in arming process. If the delay zone is triggered within the exit delay time but it restores before the time ends, the alarm will not be triggered and the zone will be armed.

Stay Arm Delay Time

Stay arming uses Stay Arm Delay Time to count down. The system gives entry/exit delay time when it is armed or reentered. It is usually used in entrance/exit route (e.g. front door/main entrance), which is a key route to arm/disarm via operating keypad for users.

Follow

The zone acts as delay zone when it detects triggering event during system Entry Delay, while it acts as instant zone otherwise.

24-hour

The zone activates all the time with sound/light output when alarm occurs, whether it is armed or not. It is usually used in fire hazardous areas equipped with smoke detectors and temperature sensors.

PIR Sensitivity

Select the sensitivity level of PIR detection.

Image Resolution

Select how many pixels are in each inch of the image. The larger the value, the higher the resolution.

Image In Series

Set the number of images captured by the camera during a single trigger.

Trigger Interval

Select the time interval at which the alarm will be triggered.

Silent Alarm

After enabled, when an alarm is triggered, only the report will be uploaded and no sound is emitted.

LED

When enabled, the LED indicator will indicate different device status.

Activation Limit

When the number of times the infrared detector is triggered exceeds the set value, the alarm will no longer be triggered.

Polling Rate

Set the interval at which the system requires the device to return a report. If the device takes longer than the **Polling Failure Times to Determine Offline** to reply, the system will report faults and the status of device will be shown as offline.

Buzzer

When enabled, the buzzer will sound once when there is no picture alarm, picture alarm, fault prompt, or fault occurs or recovers.

Click **Save**.

Click to view the device status.

Click , the device will enter the find me mode to search for the device location.

Chapter 6 Specifications

Model WE: 868 MHz WB: 433 MHz		DS-PDPC18-HM-WE/ DS-PDPC18-HM-WEUHK	DS-PDPC18-HM-WB/ DS-PDPC18-HM-WBUHK
Detection performance	Detection method	Passive Infrared, Video Verification	
	Detection range	18 m	
	Detection angle	90°	
	Detection zones	118	
	Detectable speed	0.3 to 2 m/s	
	Sensitivity	Auto, High, Low	
	Pet immunity	24 Kg	
	White light filter	20000 lux	
	Digital temperature compensation	Support	
Feature	Digital processing	Support	
	Sealed optics	Support	
	Tamper protection	Front, Rear	
	Environment temperature indicator	Support	
	Signal strength indicator	Support	
Video	Field angle	113°(H), 60°(V)	
	Image type	JPEG	
	Resolusion	320*240*3pic, 160*120*5pic	
	Fill light	Infrared Light	
	Fill range	18 m	
	Day/Night switch	Color/Black & White	
Interface	Power switch	Power Up Enrolling	
	LED Indicator	Blue (Alarm)	

Model WE: 868 MHz WB: 433 MHz		DS-PDPC18-HM-WE/ DS-PDPC18-HM-WEUHK	DS-PDPC18-HM-WB/ DS-PDPC18-HM-WBUHK
Transmission	Transmission technology	CAM-X Wireless	
	Transmission method	Two-Way RF Wireless	
	Transmission frequency	868 MHz	433 MHz
	Transmission security	AES-128 Encryption	
	Transmission range (free space)	800 m	
	Enrolling method	Power up, Remote ID, QR Code	
Electrical characteristics	Standard battery life	Up to 3 years at normal temperature (The battery working time can be significantly reduced at low temperatures)	
	Power supply	Battery powered	
	Battery type	CR123A × 4	
	Typical voltage	3 V	
General	Operation temperature	-25 °C to 60 °C (-13 °F to 140 °F)	
	Storage temperature	-25 °C to 60 °C (-13 °F to 140 °F)	
	Operation humidity	10% to 90%	
	Dimension (W × H × D)	68 mm × 193 mm × 65 mm	
	Weight	500 g	
	Mounting height	2.5 to 3 m high mount 0.8 to 1.2 m low mount	
	Mounting method	Wall	
	Application scenario	Outdoor	
	Bracket	Adjustment bracket included	

See Far, Go Further